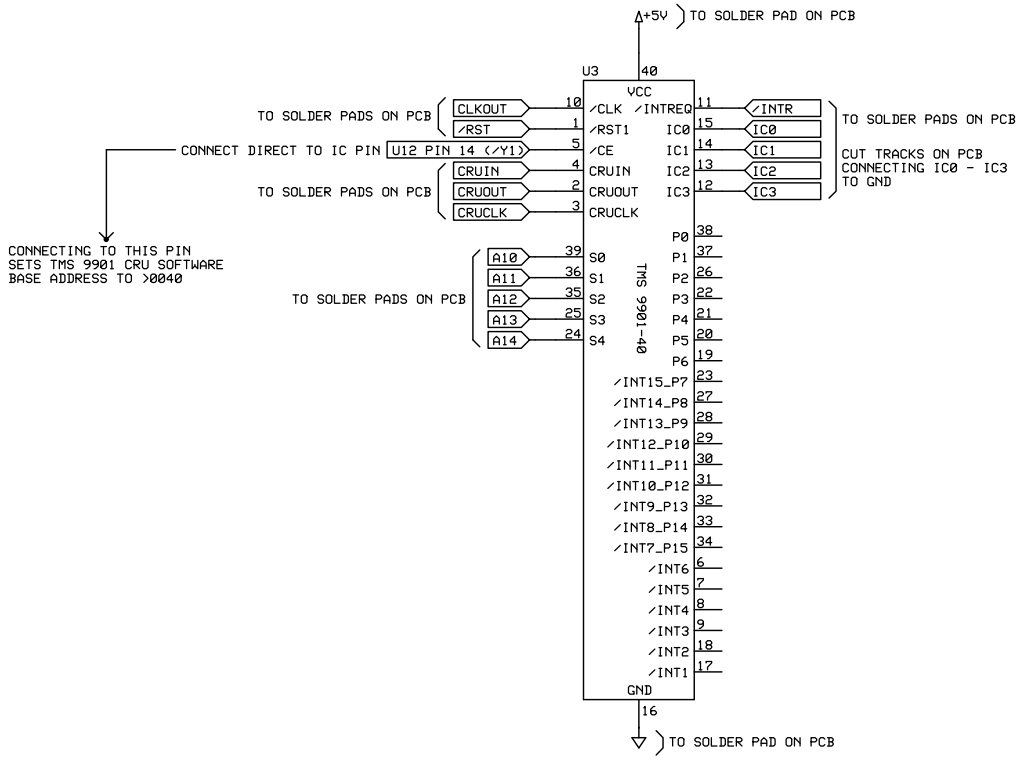

TMS 99110 - TMS 9901 EXPAN.		
PCB Project		
Stuart Conner	Rev 1.0 11/11/2020	Page 1 of 1